MCU

U1A

	PA0_C	T1	PA0_C	PD0	D13	PD0	FMC_D2
SDMMC2_CMD	PA0	N5	PA0	PD1	E12	PD1	FMC_D3
	PA1_C	T2	PA1_C	PD2	D12	PD2	SDMMC1_CMD
	PA1	N4	PA1	PD3	B12	PD3	
WKUP	PA2	N3	PA2	PD4	A12	PD4	
LED0	PA3	U2	PA3	PD5	A11	PD5	
DCMI_HSYNC	PA4	U3	PA4	PD6	B11	PD6	SDMMC2_CK
	PA5	T3	PA5	PD7	C11	PD7	
DCMI_PIXCLK	PA6	R3	PA6	PD8	U16	PD8	FMC_D13
	PA7	R5	PA7	PD9	T17	PD9	FMC_D14
KEY0	PA8	E15	PA8	PD10	T16	PD10	FMC_D15
USART1_TX	PA9	D15	PA9	PD11	R15	PD11	DCMI_SCL
USART1_RX	PA10	D14	PA10	PD12	R16	PD12	I2C4_SCL
USB_FS_DM	PA11	E17	PA11	PD13	R17	PD13	I2C4_SDA
USB_FS_DP	PA12	E16	PA12	PD14	P16	PD14	FMC_D0
SWDIO	PA13	C15	PA13	PD15	P15	PD15	FMC_D1
SWCLK	PA14	B14	PA14				
	PA15	A14	PA15				
				PE0	C4	PE0	FMC_NBL0
BL_CTR	PB0	U5	PB0	PE1	B4	PE1	FMC_NBL1
LED1	PB1	T5	PB1	PE2	C3	PE2	SPI4_SCK
	PB2	R6	PB2	PE3	D3	PE3	
SDMMC2_D2	PB3	C6	PB3	PE4	D2	PE4	SPI4_CS
SDMMC2_D3	PB4	B7	PB4	PE5	D1	PE5	SPI4_MISO
CTP-INT_RTP-PEN	PB5	A5	PB5	PE6	E5	PE6	SPI4_MOSI
DCMI_D5	PB6	B5	PB6	PE7	U9	PE7	FMC_D4
DCMI_VSYNC	PB7	C5	PB7	PE8	T9	PE8	FMC_D5
DCMI_D6	PB8	D5	PB8	PE9	P9	PE9	FMC_D6
DCMI_D7	PB9	D4	PB9	PE10	N9	PE10	FMC_D7
I2C2_SCL CTP-SCL_RTP-SCK	PB10	P11	PB10	PE11	P10	PE11	FMC_D8
I2C2_SDA CTP-SDA_RTP_MOSI	PB11	P12	PB11	PE12	R10	PE12	FMC_D9
CTP-RST_RTP-CS	PB12	T14	PB12	PE13	T10	PE13	FMC_D10
RTP_MISO	PB13	U14	PB13	PE14	U10	PE14	FMC_D11
SDMMC2_D0	PB14	U15	PB14	PE15	R11	PE15	FMC_D12
SDMMC2_D1	PB15	T15	PB15				
				PF0	G4	PF0	FMC_A0
FMC_SDNWE	PC0	L2	PC0	PF1	G3	PF1	FMC_A1
	PC1	M2	PC1	PF2	G1	PF2	FMC_A2
	PC2	M3	PC2	PF3	H4	PF3	FMC_A3
	PC2_C	R1	PC2_C	PF4	J5	PF4	FMC_A4
LCD_DC	PC3	M4	PC3	PF5	J4	PF5	FMC_A5
	PC3_C	R2	PC3_C	PF6	K2	PF6	QSPI_BK1_IO3
	PC4	T4	PC4	PF7	K3	PF7	QSPI_BK1_IO2
	PC5	U4	PC5	PF8	K4	PF8	QSPI_BK1_IO0
DCMI_D0	PC6	F14	PC6	PF9	L4	PF9	QSPI_BK1_IO1
DCMI_D1	PC7	F13	PC7	PF10	L3	PF10	QSPI_CLK
SDMMC1_D0 DCMI_D2	PC8	E13	PC8	PF11	T7	PF11	FMC_SDNRAS
SDMMC1_D1 DCMI_D3	PC9	E14	PC9	PF12	R7	PF12	FMC_A6
SDMMC1_D2	PC10	A13	PC10	PF13	P7	PF13	FMC_A7
SDMMC1_D3 DCMI_D4	PC11	B13	PC11	PF14	P8	PF14	FMC_A8
SDMMC1_CK	PC12	C12	PC12	PF15	R9	PF15	FMC_A9
	PC13	E3	PC13				
OSC32_IN	PC14	C2	PC14_OSC32_IN				
OSC32_OUT	PC15	C1	PC15_OSC32_OUT				

STM32H747XIH6

U1B

FMC_A10	PG0	T8	PG0	PI0	A16	PI0	FMC_D24
FMC_A11	PG1	U8	PG1	PI1	A15	PI1	FMC_D25
LED_EN	PG2	H16	PG2	PI2	B15	PI2	FMC_D26
DCMI_SDA	PG3	H15	PG3	PI3	C14	PI3	FMC_D27
FMC_BA0	PG4	H14	PG4	PI4	A4	PI4	FMC_NBL2
FMC_BA1	PG5	G14	PG5	PI5	A3	PI5	FMC_NBL3
QSPI_CS	PG6	G15	PG6	PI6	A2	PI6	FMC_D28
DCMI_PDWN	PG7	F16	PG7	PI7	B3	PI7	FMC_D29
FMC_SDCLK	PG8	F15	PG8	PI8	E4	PI8	DCMI_RST
	PG9	A10	PG9	PI9	E2	PI9	FMC_D30
	PG10	A9	PG10	PI10	F3	PI10	FMC_D31
	PG11	B9	PG11	PI11	F4	PI11	LCD_PWREN
	PG12	C9	PG12	PI12	H1	PI12	LCD_HSYNC
	PG13	D9	PG13	PI13	H2	PI13	LCD_VSYNC
	PG14	D8	PG14	PI14	H3	PI14	LCD_PCLK
FMC_SDNCAS	PG15	D6	PG15	PI15	P5	PI15	LCD_R0
OSC_IN	PH0	J2	PH0-OSC_IN	PJ0	N6	PJ0	LCD_R1
OSC_OUT	PH1	J1	PH1-OSC_OUT	PJ1	P6	PJ1	LCD_R2
	PH2	N2	PH2	PJ2	T6	PJ2	LCD_R3
	PH3	P2	PH3	PJ3	U6	PJ3	LCD_R4
LCD_ID	PH4	P3	PH4	PJ4	U7	PJ4	LCD_R5
LCD_RST	PH5	P4	PH5	PJ5	R12	PJ5	LCD_R6
FMC_SDNE1	PH6	T11	PH6	PJ6	N15	PJ6	LCD_R7
FMC_SDCKE1	PH7	U13	PH7	PJ7	N14	PJ7	LCD_G0
FMC_D16	PH8	T13	PH8	PJ8	N13	PJ8	LCD_G1
FMC_D17	PH9	R13	PH9	PJ9	M14	PJ9	LCD_G2
FMC_D18	PH10	P13	PH10	PJ10	L14	PJ10	LCD_G3
FMC_D19	PH11	P14	PH11	PJ11	K14	PJ11	LCD_G4
FMC_D20	PH12	R14	PH12	PJ12	D11	PJ12	LCD_B0
FMC_D21	PH13	D16	PH13	PJ13	E10	PJ13	LCD_B1
FMC_D22	PH14	B17	PH14	PJ14	D10	PJ14	LCD_B2
FMC_D23	PH15	B16	PH15	PJ15	B10	PJ15	LCD_B3
				PK0	J14	PK0	LCD_G5
DSI_D0P	M16		DSI_D0P	PK1	J15	PK1	LCD_G6
DSI_D0N	M17		DSI_D0N	PK2	H17	PK2	LCD_G7
DSI_CKP	L16		DSI_CKP	PK3	C8	PK3	LCD_B4
DSI_CKN	L17		DSI_CKN	PK4	B8	PK4	LCD_B5
DSI_D1P	K16		DSI_D1P	PK5	A8	PK5	LCD_B6
DSI_D1N	K17		DSI_D0P	PK6	C7	PK6	LCD_B7
				PK7	D7	PK7	LCD_DEN

STM32H747XIH6

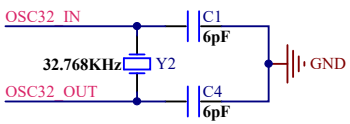

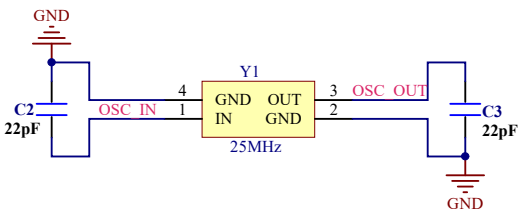

项目名称	STM32H747XIH6 CB V1.2	
设计时间	2025-12-22	Page 1 of 6
公司名称	东莞市慧勤智远科技有限公司	

MCU

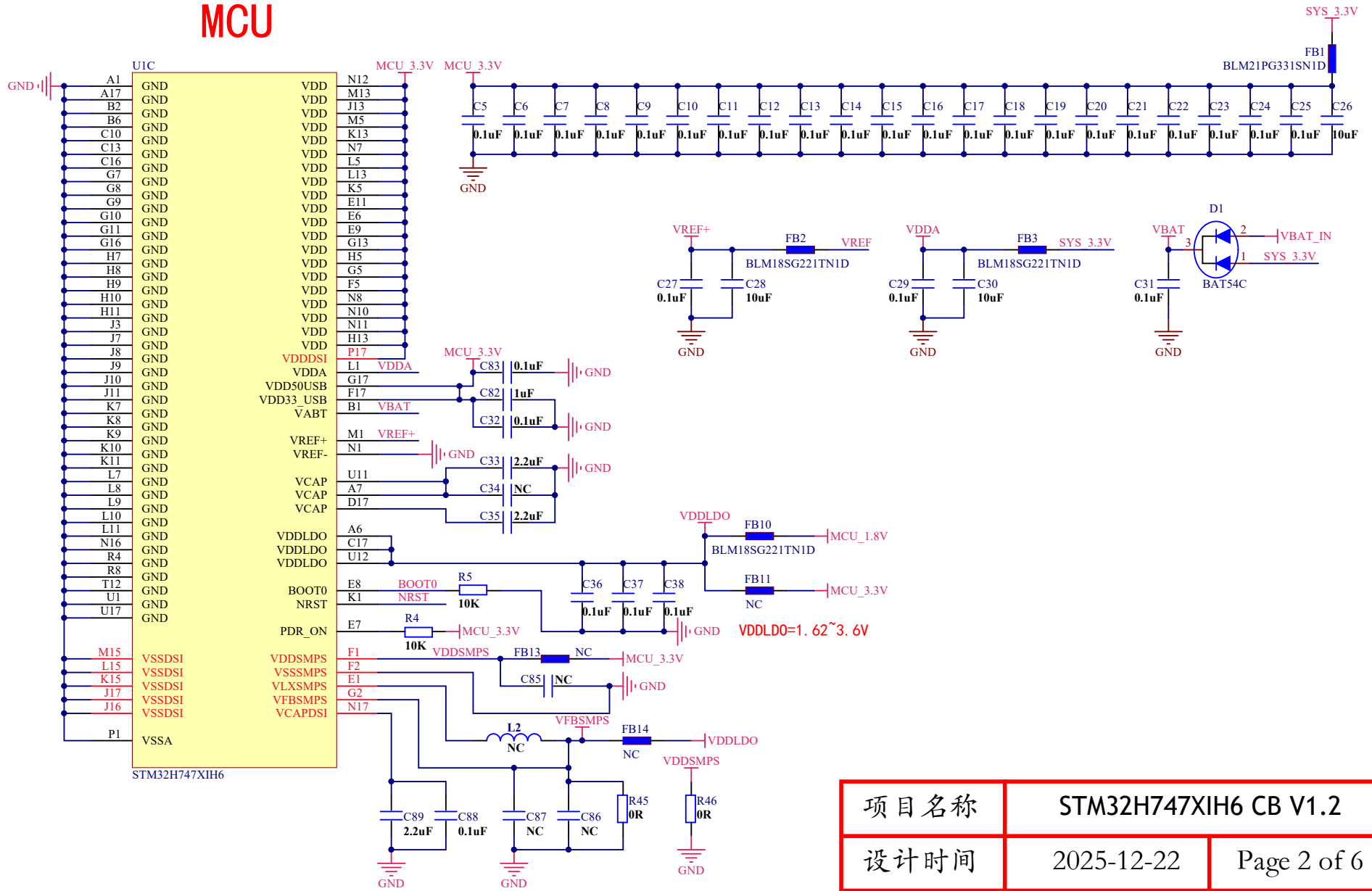

项目名称	STM32H747XIH6 CB V1.2	
设计时间	2025-12-22	Page 2 of 6
公司名称	东莞市慧勤智远科技有限公司	

SDRAM

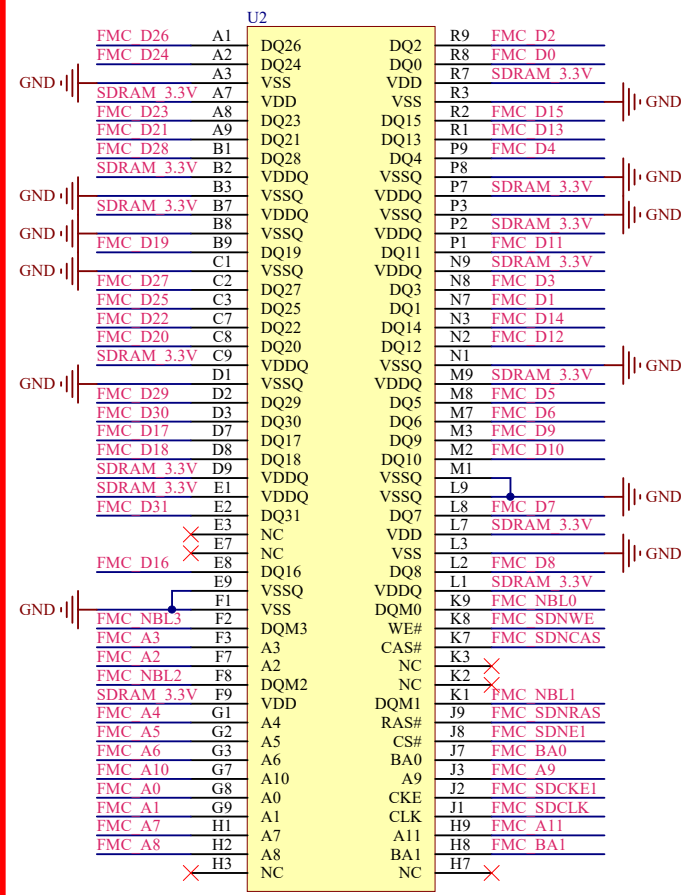

TF CARD

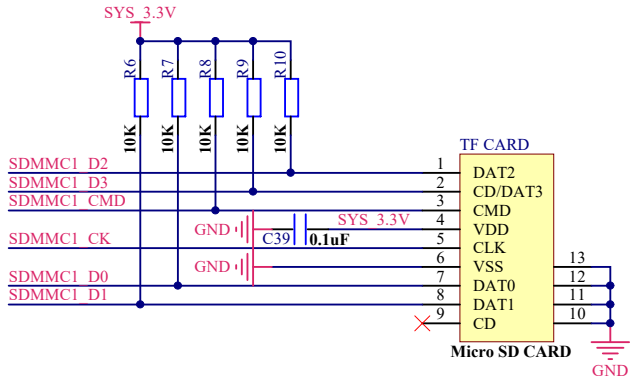

EEPROM

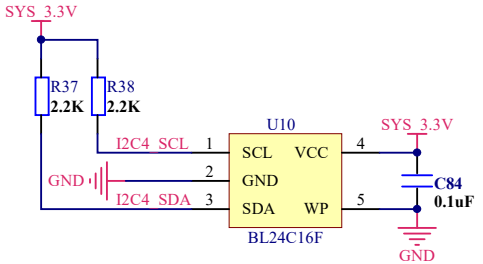

QSPI FLASH

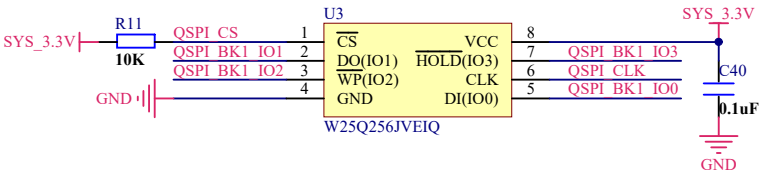

SD NAND

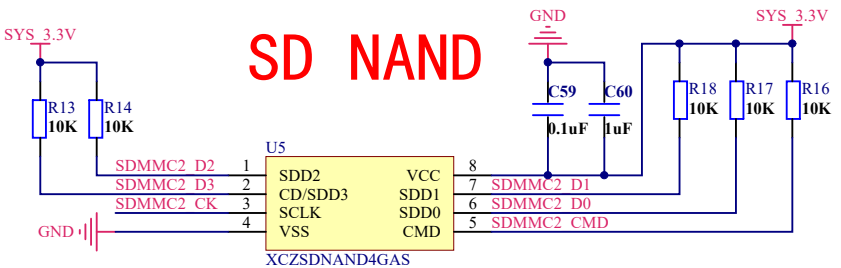

项目名称	STM32H747XIH6 CB V1.2	
设计时间	2025-12-22	Page 3 of 6
公司名称	东莞市慧勤智远科技有限公司	

RGB

TP pin define

PIN NO.	CTP	RTP
PIN35	RST	CS
PIN36	SDA	MOSI
PIN37	NC	MISO
PIN38	SCL	SCK
PIN39	INT	PEN

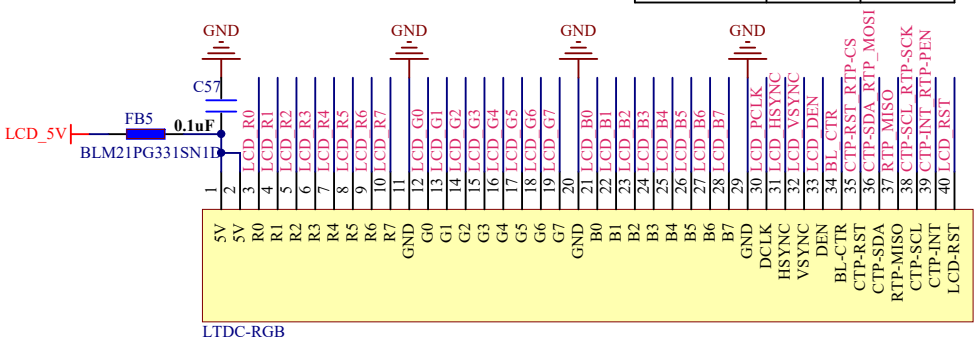

DSI

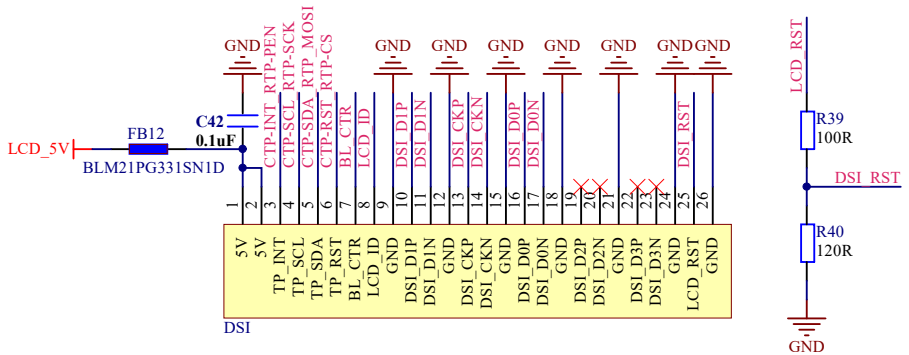

SPI

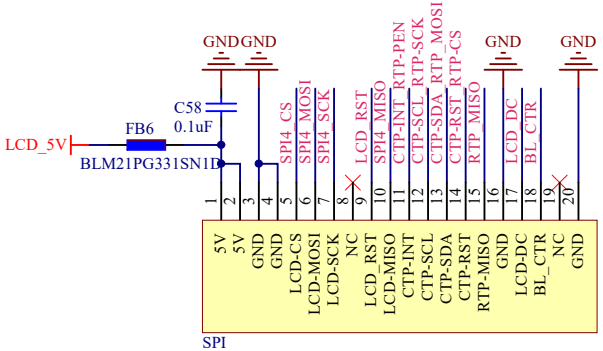

TP pin define

PIN NO.	CTP	RTP
PIN11	INT	PEN
PIN12	SCL	SCK
PIN13	SDA	MOSI
PIN14	RST	CS
PIN15	NC	MISO

LCD POWER SWITCH

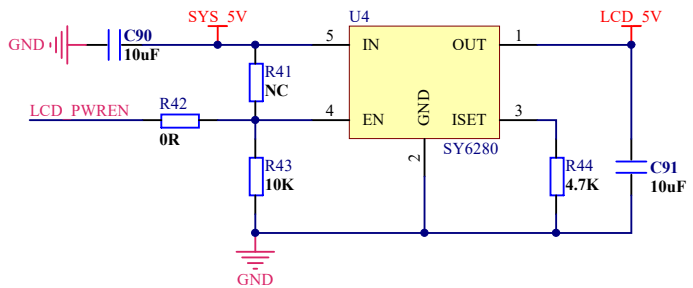

项目名称	STM32H747XIH6 CB V1.2	
设计时间	2025-12-22	Page 4 of 6
公司名称	东莞市慧勤智远科技有限公司	

USB OTG

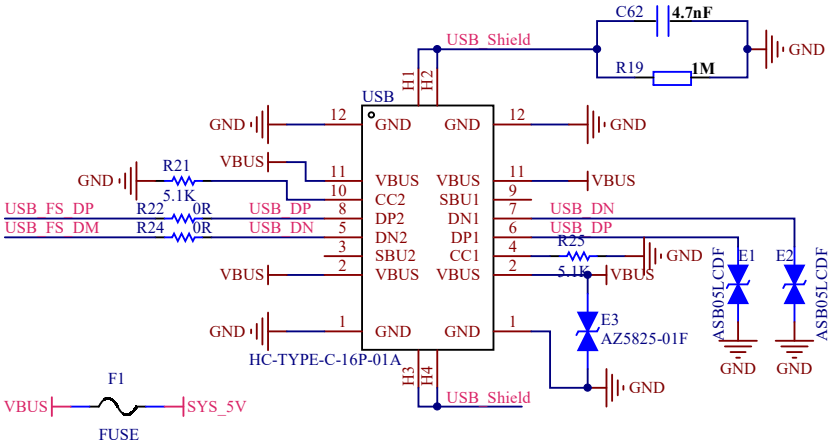

COM

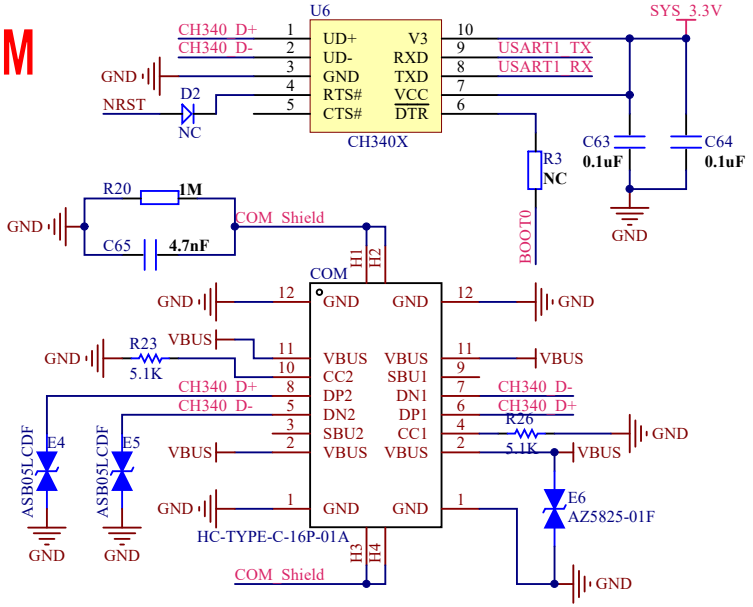

KEY

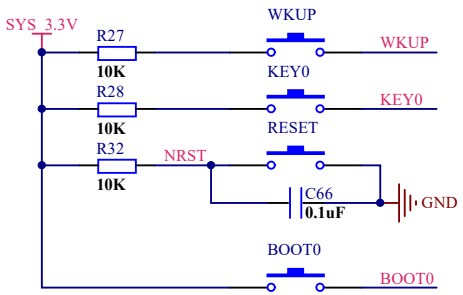

LED

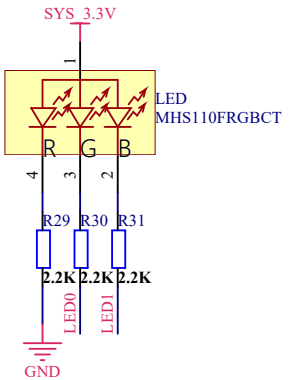

SWD

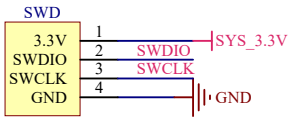

项目名称	STM32H747XIH6 CB V1.2	
设计时间	2025-12-22	Page 5 of 6
公司名称	东莞市慧勤智远科技有限公司	

POWER

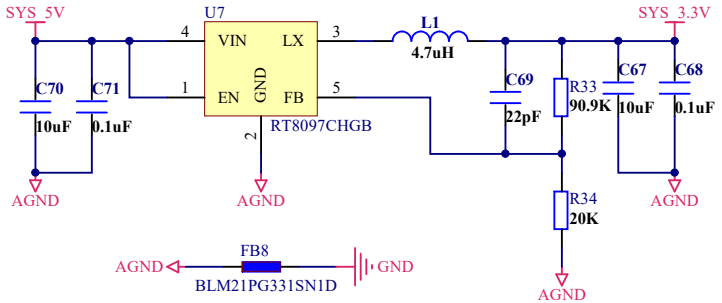

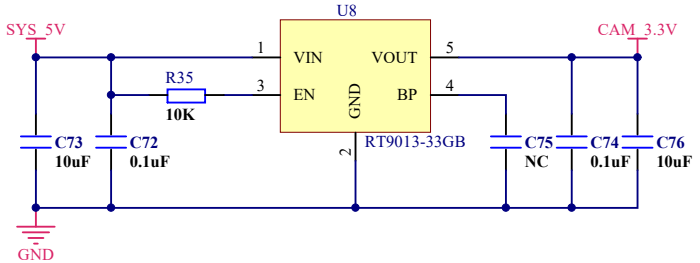

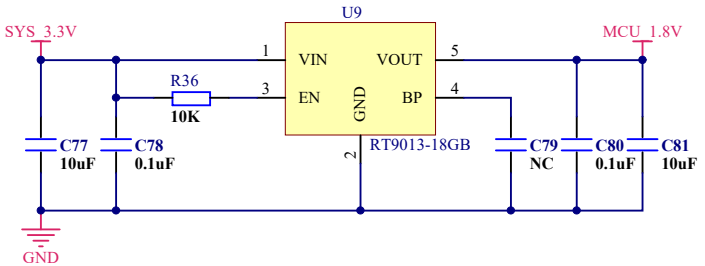

GPIO

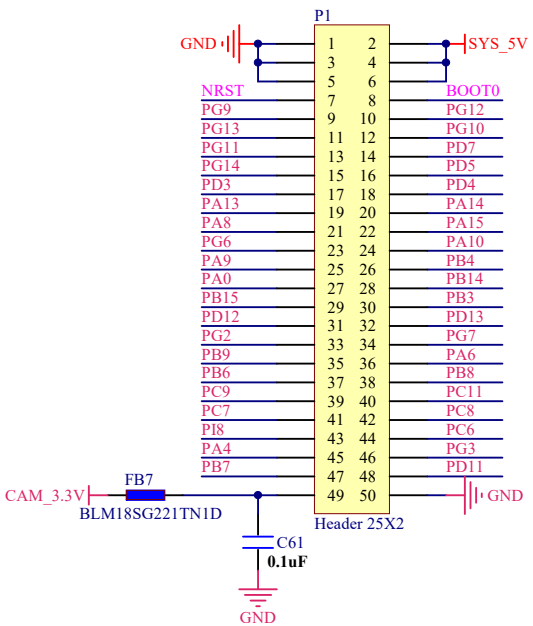

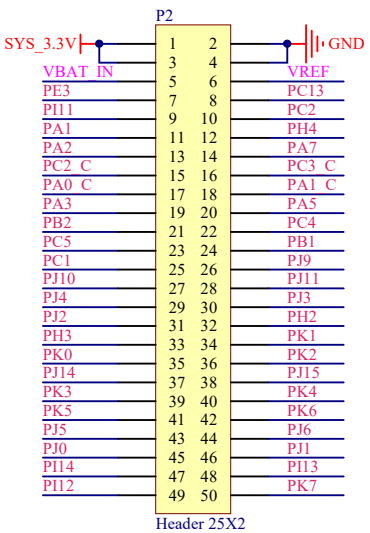

M3 HOLE

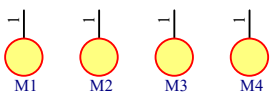

项目名称	STM32H747XIH6 CB V1.2	
设计时间	2025-12-22	Page 6 of 6
公司名称	东莞市慧勤智远科技有限公司	